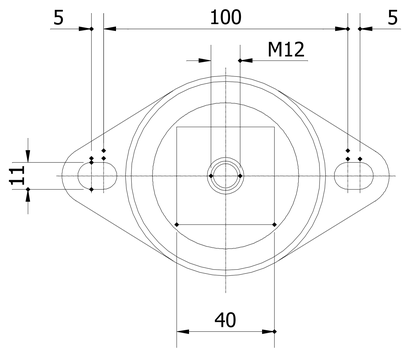

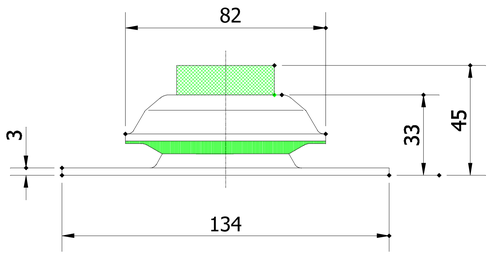

MATERIAL STEEL			
FLANGES -	MOD	DESCRIPTION	DRAWN / DATE
COATING -		Axces B.V. Ondernemersweg 12 4691 SL Tholen The Netherlands www.axces.com +31 (0) 166 603 285	ALL RIGHTS RESERVED THIS DRAWING SHALL NOT BE REPRODUCED WITHOUT THE PRIOR PERMISSION OF **AXCES B.V.**
WELDING QUALITY ACC. TO 5817 CLASS C			NUMBER OF SHEETS: 1 DATE: 2014-01-29
TOLERANCES ACC. TO EN-ISO 13920 CLASS B,F			ARTICLE NUMBER: 131100000015
TITLE: SUPPORTING POINT		DRAWING NUMBER: 290114/OAX225	DRAWN: ES
TYPE: FIXED SUSPENSION OAX225		SPARK ARRESTOR: -	DAMPING: -
PROJECTION		WEIGHT: - Kg	SCALE: 1 / 2 FORMAT: A3

DIMENSIONS	LENGTH	ANGLE	STRAIGHTNESS FLATNESS PARALLELISM
400 mm	+/-2 mm	+/-45'	+/-1,5 mm
1000 mm	+/-3 mm	+/-30'	+/-3 mm
2000 mm	+/-4 mm	+/-20'	+/-4,5 mm
4000 mm	+/-6 mm	+/-20'	+/-6 mm
>4000 mm	+/-8 mm	+/-20'	+/-8 mm

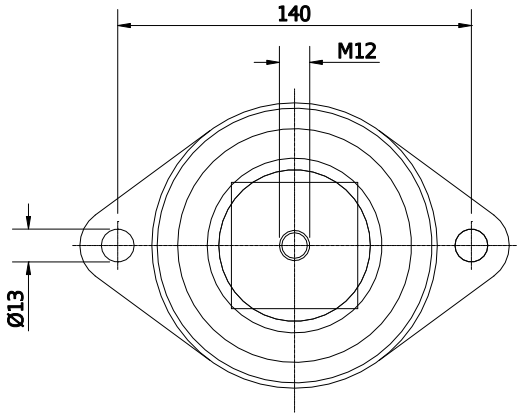

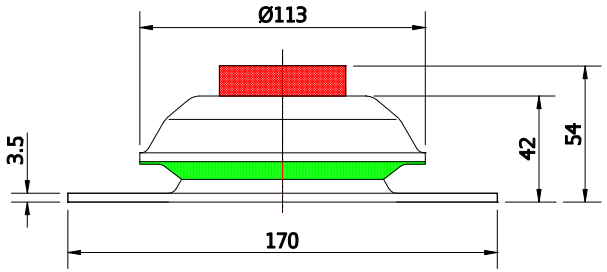

MATERIAL STEEL					
FLANGES -	MOD	DESCRIPTION		DRAWN	DATE
COATING -			Axces B.V. Ondernemersweg 12 4691 SL Tholen The Netherlands www.axces.com +31 (0) 166 603 285	ALL RIGHTS RESERVED THIS DRAWING SHALL NOT BE REPRODUCED WITHOUT THE PRIOR PERMISSION OF AXCES B.V.	
WELDING QUALITY ACC. TO 5817 CLASS C				NUMBER OF SHEETS 1	DATE 2014-01-29
TOLERANCES ACC. TO EN-ISO 13920 CLASS B,F				ARTICLE NUMBER 131100000020	

DIMENSIONS	LENGTH	ANGLE	STRAIGHTNESS FLATNESS PARALLEUSM
400 mm	+/-2 mm	+/-45'	+/-1,5 mm
1000 mm	+/-3 mm	+/-30'	+/-3 mm
2000 mm	+/-4 mm	+/-20'	+/-4,5 mm
4000 mm	+/-6 mm	+/-20'	+/-6 mm
>4000 mm	+/-8 mm	+/-20'	+/-8 mm

TITLE SUPPORTING POINT	DRAWING NUMBER 290114/OAX475	DRAWN ES	
TYPE FIXED SUSPENSION OAX475	SPARK ARRESTOR -	DAMPING -	
PROJECTION	WEIGHT - Kg	SCALE 1 / 2	FORMAT A3

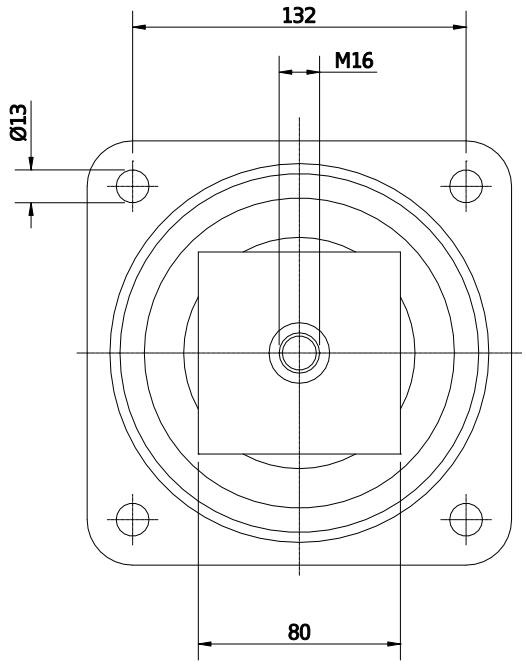

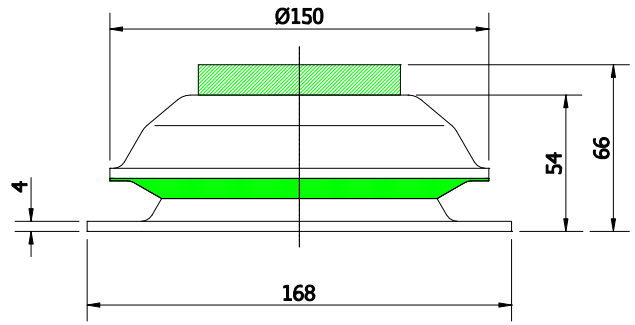

MATERIAL					
STEEL					
FLANGES -	MOD	DESCRIPTION		DRAWN	DATE
COATING -			Axces B.V. Ondernemersweg 12 4691 SL Tholen The Netherlands www.axces.com +31 (0) 166 603 285	ALL RIGHTS RESERVED THIS DRAWING SHALL NOT BE REPRODUCED WITHOUT THE PRIOR PERMISSION OF AXCES B.V.	
WELDING QUALITY ACC. TO 5817 CLASS C				NUMBER OF SHEETS: 1	DATE: 2014-01-29
TOLERANCES ACC. TO EN-ISO 13920 CLASS B,F				ARTICLE NUMBER: 131100000025	
TITLE: SUPPORTING POINT			DRAWING NUMBER: 290114/OAX1400	DRAWN: ES	
TYPE: FIXED SUSPENSION OAX1400			SPARK ARRESTOR: -	DAMPING: -	
PROJECTION			WEIGHT: - Kg	SCALE: 1 / 2	FORMAT: A3

DIMENSIONS	LENGTH	ANGLE	STRAIGHTNESS FLATNESS PARALLEUSM
400 mm	+/-2 mm	+/-45'	+/-1,5 mm
1000 mm	+/-3 mm	+/-30'	+/-3 mm
2000 mm	+/-4 mm	+/-20'	+/-4,5 mm
4000 mm	+/-6 mm	+/-20'	+/-6 mm
>4000 mm	+/-8 mm	+/-20'	+/-8 mm

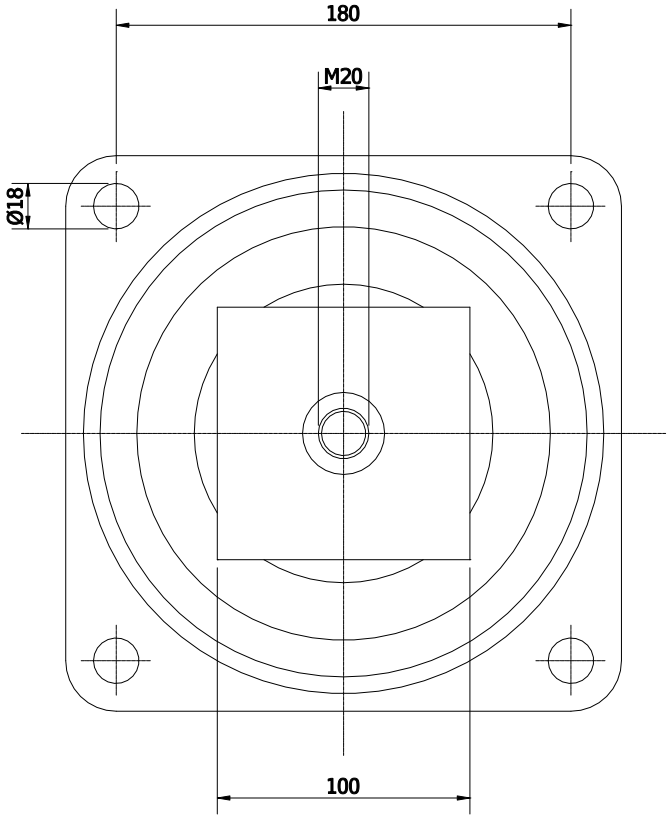

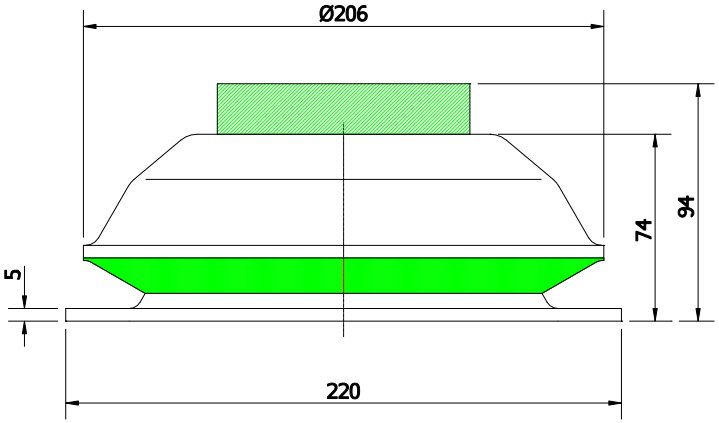

MATERIAL STEEL					
FLANGES -	MOD	DESCRIPTION		DRAWN	DATE
COATING -			Axces B.V. Ondernemersweg 12 4691 SL Tholen The Netherlands www.axces.com +31 (0) 166 603 285	ALL RIGHTS RESERVED THIS DRAWING SHALL NOT BE REPRODUCED WITHOUT THE PRIOR PERMISSION OF AXCES B.V.	
WELDING QUALITY ACC. TO 5817 CLASS C				NUMBER OF SHEETS 1	DATE 2014-01-29
TOLERANCES ACC. TO EN-ISO 13920 CLASS B,F				ARTICLE NUMBER 131100000030	
TITLE SUPPORTING POINT			DRAWING NUMBER 290114/OAX3600	DRAWN ES	
TYPE FIXED SUSPENSION OAX3600			SPARK ARRESTOR -	DAMPING -	
PROJECTION			WEIGHT - Kg	SCALE 1 / 2	FORMAT A3

DIMENSIONS	LENGTH	ANGLE	STRAIGHTNESS FLATNESS PARALLEUSM
400 mm	+/-2 mm	+/-45'	+/-1,5 mm
1000 mm	+/-3 mm	+/-30'	+/-3 mm
2000 mm	+/-4 mm	+/-20'	+/-4,5 mm
4000 mm	+/-6 mm	+/-20'	+/-6 mm
>4000 mm	+/-8 mm	+/-20'	+/-8 mm